Electrolux PROFESSIONAL

Modular Preparation 600 mm Cupboard Base for Sink Top

ITEM #

MODEL #

NAME #

SIS #

AIA #

121201 (TELP6) Cupboard Base for Sinks Top, 600mm

Short Form Specification

Item No.

Constructed entirely in 304 AISI stainless steel. Front and rear longitudinal stainless steel c-channel reinforcement. Door incorporates a sound deadening internal panel and is fitted with 304 AISI stainless steel hinges allowing an opening of 180° degrees. 150mm height-adjustable (0/+90mm) oversized feet (65x65mm) can be removed for masonry installation. 45° degree internal side corner junction system.

APPROVAL:

Main Features

- Masonry installation possible by simply removing feet.
- Extremely easy to clean thanks to the smooth edges.

Construction

- Mounted on 150 mm height adjustable (0/+90 mm) oversized (65x65 mm) feet.
- Front and rear lengthwise stainless steel c-channel reinforcement, 15/10 (16 gauges).
- Internal sides supporting the structure to have 45° degrees internal side corners junction system.
- 30 mm high middle-shelf in AISI 304 stainless steel, height-adjustable in 3 positions, with inner double fold to eliminate gaps between sides and back.
- Hinged door with sound deadening internal panels, fitted with 304 AISI stainless steel hinges on the inner sides, allows a 180° degree opening.
- Constructed entirely in AISI 304 Stainless Steel with Scotch Brite finish.

Optional Accessories

- Stainless steel plinth, 600mm PNC 855822 ❑
- Stainless steel plinth for end elements, 700mm depth PNC 855837 ❑
- Stainless steel plinth for end elements, central installation, 700mm depth PNC 855838 ❑

Modular Preparation 600 mm Cupboard Base for Sink Top

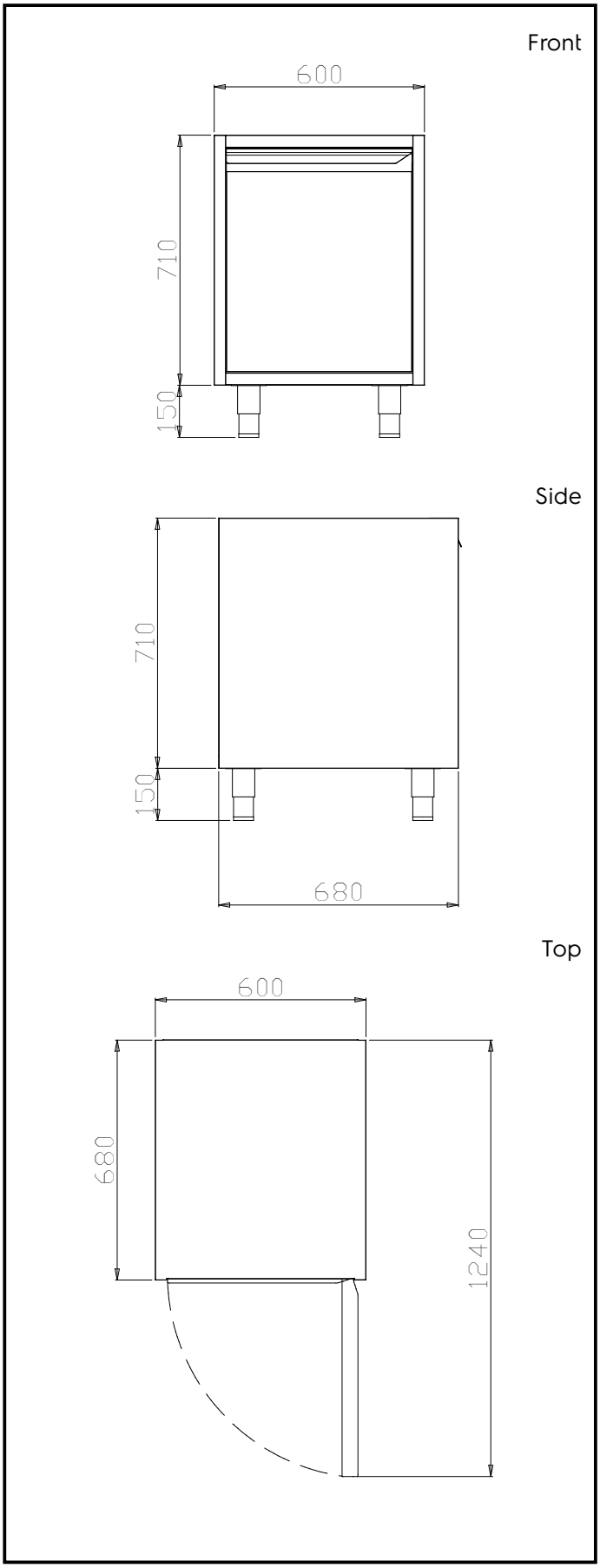

Key Information:

Cabinet width:	
121201 (TELP6)	520 mm
Cabinet depth:	570 mm
Cabinet height:	610 mm
N° of doors:	1
Door Type:	Hinged
External dimensions, Width:	600 mm
External dimensions, Depth:	680 mm
External dimensions, Height:	860 mm
Net weight:	22 kg

The company reserves the right to make modifications to the products without prior notice. All information correct at time of printing.

2024.10.05